PTOB

1301-057

YAZOO

3-WHEEL RIDER

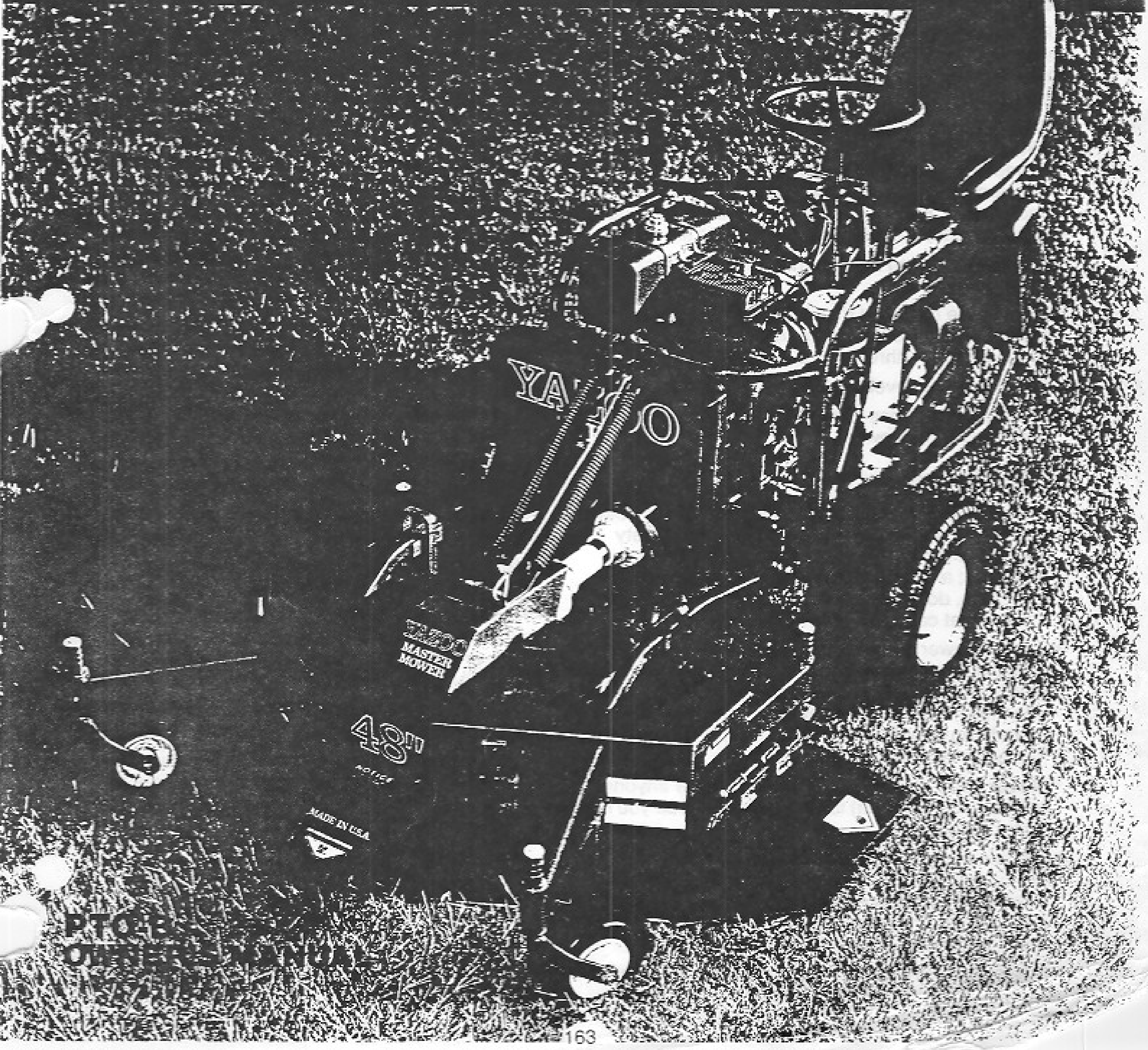
YAZOO
YAZOO
MASTER
MOWER
48"
MADE IN USA

PTO-B OWNER'S MANUAL

WARNING! 95 out of 100 mowing accidents are caused by the way the machine is operated.

That's why you shouldn't even start the ignition of your new riding mower until you've read and **thoroughly understand** this Owner's Manual (particularly the safety rules).

Because the cutting head is out front and away from the operator, your Yazoo commercial mower is safe. Since the cutting head is out in front, you can see what you are cutting. Plus, with a Yazoo rider, you're protected by heavy-duty guards, as well as the engine itself, because it's located between you and the cutting blade.

This is a **commercial** riding mower—a heavy piece of equipment that is only as safe as its operator. You make the rules, so make mowing safety a habit in your family.

Owner's Responsibility

- Insist on a safety demonstration from your Yazoo dealer.
- Read this Owner's Manual thoroughly and understand how your mower works. **Make sure you know how to stop your engine quickly.** Know where the brakes are.
- Before you start your mower, detach the spark plug wire(s) and disengage the blade drive. Then inspect beneath the cutting section, making sure all blade nuts are tight, and no foreign object is caught underneath. Finally, check the entire mower and make sure that all nuts, bolts and parts are secure.
- Adjust the cutting height while the mower is on a level, firm surface.
- Inspect the intended mowing area and pick up any stones, sticks, bottle caps or other foreign objects which might be thrown by a mower.
- Check all fluid levels—oil, gas, hydro axle.
- Disengage clutches and blades and shift into neutral before starting mower.

While Operating:

- Wear sensible clothing—long pants; boots or heavy shoes that will grip, even in wet weather; safety glasses to protect the eyes from low hanging branches; and thin gloves (like golfers') for a sure grip. Also, don't wear anything that's so loose that it might get caught on something.
- If your mower ever vibrates excessively or sounds unusual, shut off your engine, disconnect the spark plug(s) and disengage the blade drive. Then—and only then—look underneath the cutting section for something caught in the blade, or something that has been loosened or bent.
- **Never** carry passengers. And don't allow anyone (particularly children) to remain in the area you're about to mow.
- If someone should approach you, or if you need to get off your mower for any reason, shut off your engine completely—including blade drive and ignition. Do this manually, even though your mower has an operator presence control.
- The owner is responsible for keeping the operator presence control working properly.
- Do not alter or remove the safety guards or safety devices.
- Never operate your Yazoo rider at more than a 15-degree angle of bank. Most engines don't lubricate themselves properly at an angle greater than 15 degrees. Remember, too, that if you go over a root or bump, the angle of the mower will change, so allow plenty of margin to take care of the unexpected. **Most riding mower accidents happen on slopes of more than 15 degrees.**
- On slopes, mow across, not up and down. To control your Yazoo on slopes, use the foot brake as necessary. If the mower transaxle is suddenly jerked into reverse on a slope, the rear end of the mower may have a tendency to lift.
- Never let a child operate a mower. And never let anyone else operate your mower, unless he or she has received a complete course of instruction—including a safety demonstration—on how the mower operates and has read and understands the Operator's Manual.
- Do not race the engine; this is not only dangerous, it's harmful. Don't alter governor settings.
- Never mow at night, or other times when visibility is low.
- Never run the mower indoors where carbon monoxide fumes can collect.
- Handle gasoline with care. Never add fuel to a running engine. And when you run out of gas, give your engine time to cool down before refueling. Gasoline spilled on a hot engine is a fire hazard.
- Allow the engine to cool before storing rider in any enclosure such as a garage or storage shed.
- To reduce potential fire hazard, keep your mower free from build-ups of grass, grease, leaves and accumulations of dirt.

Maintain your Yazoo properly at all times. Check parts frequently and follow our maintenance and storage instructions.

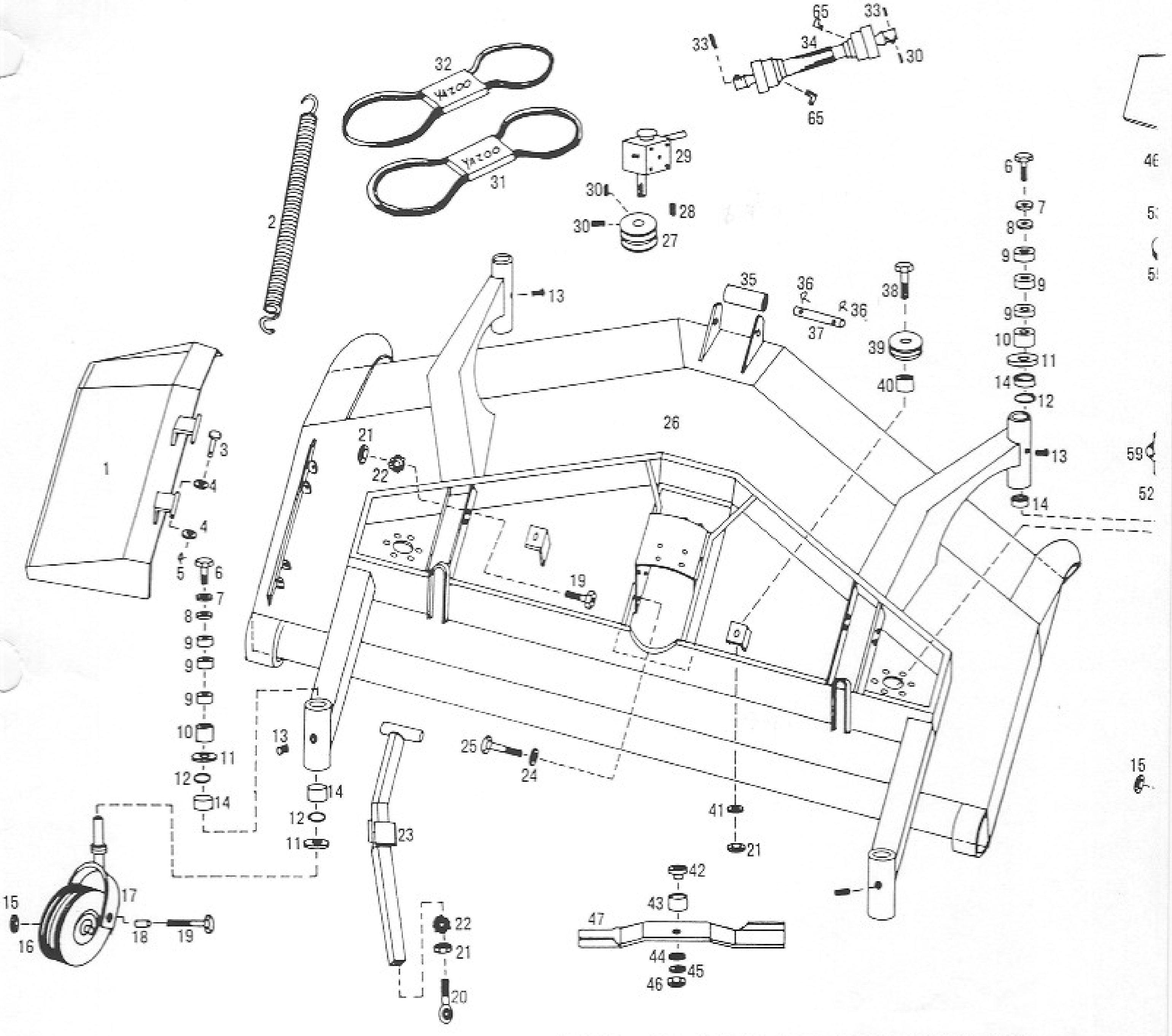
65
33
33
34
30
65
32
YAZOO
YAZOO
31
29
30
28
30
27
2
13
35
36
36
37
38
39
40
6
7
8
9
9
9
10
11
14
12
13
14
26
1
3
4
4
5
6
7
8
9
9
9
10
11
12
14
21
22
19
13
14
12
11
25
24
23
41
21
42
43
47
44
45
46
15
16
17
18
19
22
21
20
59
52
15

PSG-48, PSG-60 AND PSG-76 CUTTING SECTION PARTS

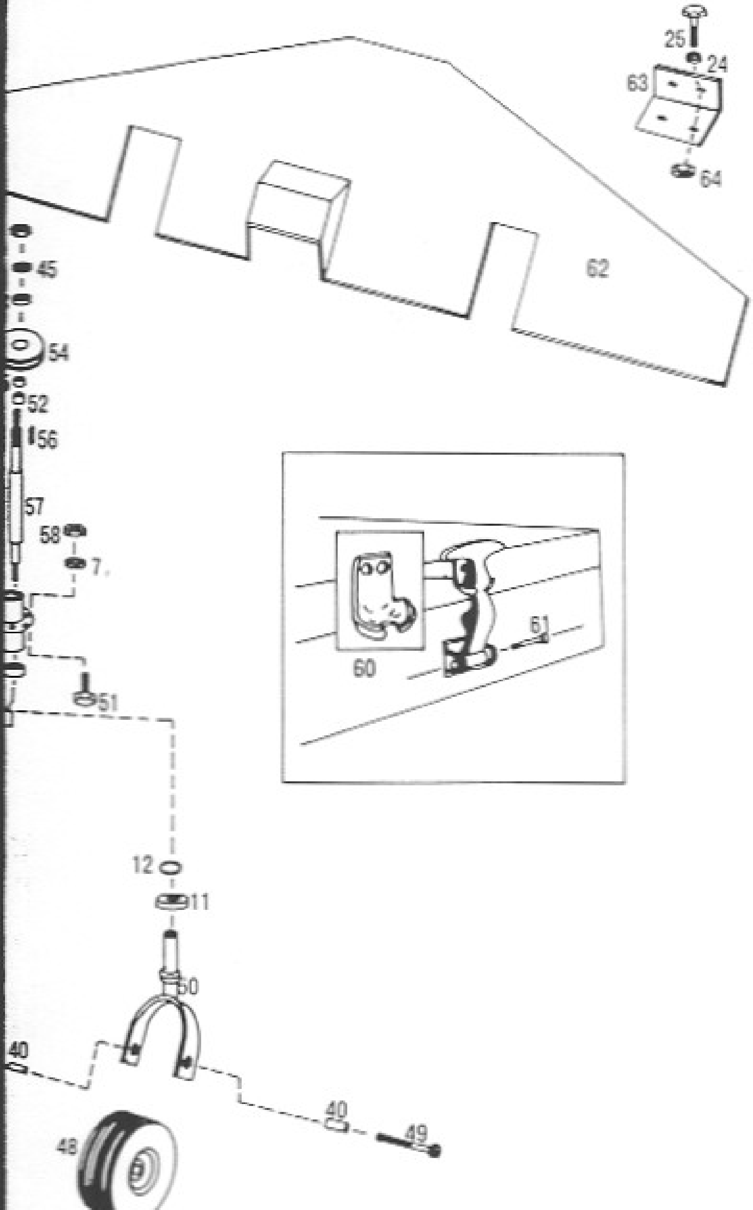

No.	Part No.	Description
1	306-017	Chute, Guard PSG-48
	306-016	Chute, PSG-60
	306-021	Chute, Discharge PSG-76
2	1916-051	Spring, C/S Lift
3	1604-043	Pin, Clevis B/W Guard
4	2301-020	Washer, ¼'' Flat
5	1604-002	Pin, Cotter 3/32'' x 1''
6	209-108	Bolt, 5/16'' x ¾'' USS Cap
7	2301-004	Washer, 5/16'' Lock
8	2301-102	Washer, Flat
9	1913-121	Spacer, 1¼'' OD x 1'' x 1½''
10	1913-120	Spacer, 1¼'' OD x 1'' x 1''
11	2301-098	Washer, ¾'' OD
12	1806-002	Ring, 1¼'' OD x 1'' O Ring ID

No.	Part No.	Description
13	603-004	Fitting, Grease
14	215-122	Bushing, 1¼'' x 1'' x 1''
15	1401-072	Nut, ⅝'' SAE Flex Lock
16	2302-004	Wheel, C/S Small
17	2501-032	Yoke, 1'' Rear C/S
18	215-025	Bushing, ⅝'' ID x 2½''
19	103-095	Axle, w/Grease Zerk
20	502-004	End, Rod
21	1401-070	Nut, SAE Jam
22	2301-011	Washer, ⅝'' Star Lock
23	102-058	Arm, PSG-48 Cut Sec
	102-056	Arm, PSG-60 Cut Sec
	102-057	Arm, PSG-76 Cut Sec
24	2301-006	Washer, ⅜'' Lock
25	209-314	Bolt, ⅜'' x 1'' NC HH

No.	Part No.	Description
26	605-095	Frame, PSG-48
	605-094	Frame, PSG-60
	605-093	Frame, PSG-76
27	1608-145	Pulley, Center PTO
28	1102-002	Key, ¼'' x ¼'' x 1''
29	407-007	Drive, Right Angle
30	1901-033	Screw, Set 5/16'' x ¾'' SH
31	205-053	Belt, PSG-48 (Wing)
	205-061	Belt, Wing, RAD PSG-60
	205-073	Belt, PTO Trans PSG-76
32	205-046	Belt, PSG-48
	205-055	Belt, Wing, RAD PSG-60
	205-066	Belt, Trans PSG-76
33	1604-066	Pin, Roll 5/16'' x 2¼''
34	1904-190	Shaft, Drive Complete
35	1809-003	Roller, Rubber C/S PSG
36	1604-042	Pin, Cotter
37	1809-003-002	Roller, Pin, Roller
38	209-634	Bolt, ⅝'' x 2''
39	1608-095	Pulley, Idler (New C/S)
40	1913-232	Spacer, ⅝'' OD x .36'' OD x ½''
41	2301-010	Washer, ⅝'' Lock
42	101-003	Adapt, Blade
43	1906-006	Shield, HUB
44	2301-096	Washer, Concave
45	2301-012	Washer, ⅝'' LH Lock
46	1401-073	Nut, 5'' LH SAE
47	206-748	Blade, PSG-48 Offset
	206-760	Blade, PSG-60 Offset
	206-776	Blade, PSG-76 Offset
48	2305-078	Wheel, Front PSG-48
	2305-059	Wheel, Assy, FRT C/S PSG-60 & PSG-76
49	209-168	Bolt, ⅝'' x 6½''
50	2501-031	Yoke, 1'' FRT C/S PSG-48
	2501-040	Yoke, PSG-60 & PSG-76 (Front)
51	209-120	Bolt, 5/16'' x 1¼'' NC HH
52	204-060	Bearing, ¾'' HUB
53	2301-028	Washer, 11⅝'' OD x ¾'' ID x 13''
54	1608-144	Pulley, Wing
55	1913-200	Spacer, 1⅜'' OD x ⅞'' ID x ½''
56	1102-001	Key, 3/16'' x 3/16'' x 1''
57	1904-063	Shaft, PSG-C/S
58	1401-020	Nut, 5/15'' USS
59	806-206	Housing, HUB PSG
60	1208-023	Latch, Hood, Assy
61	1604-093	Pin, Hood Latch
62	804-076	Hood, PSG-48
	804-077	Hood, PSG-60
	804-078	Hood, PSG-76
63	214-329	Bracket, Lift PSG-48 & PSG-60
	214-328	Bracket, Lift PSG-76
64	1401-030	Nut, ⅜'' USS
65	603-007	Fitting, Grease 90° metric

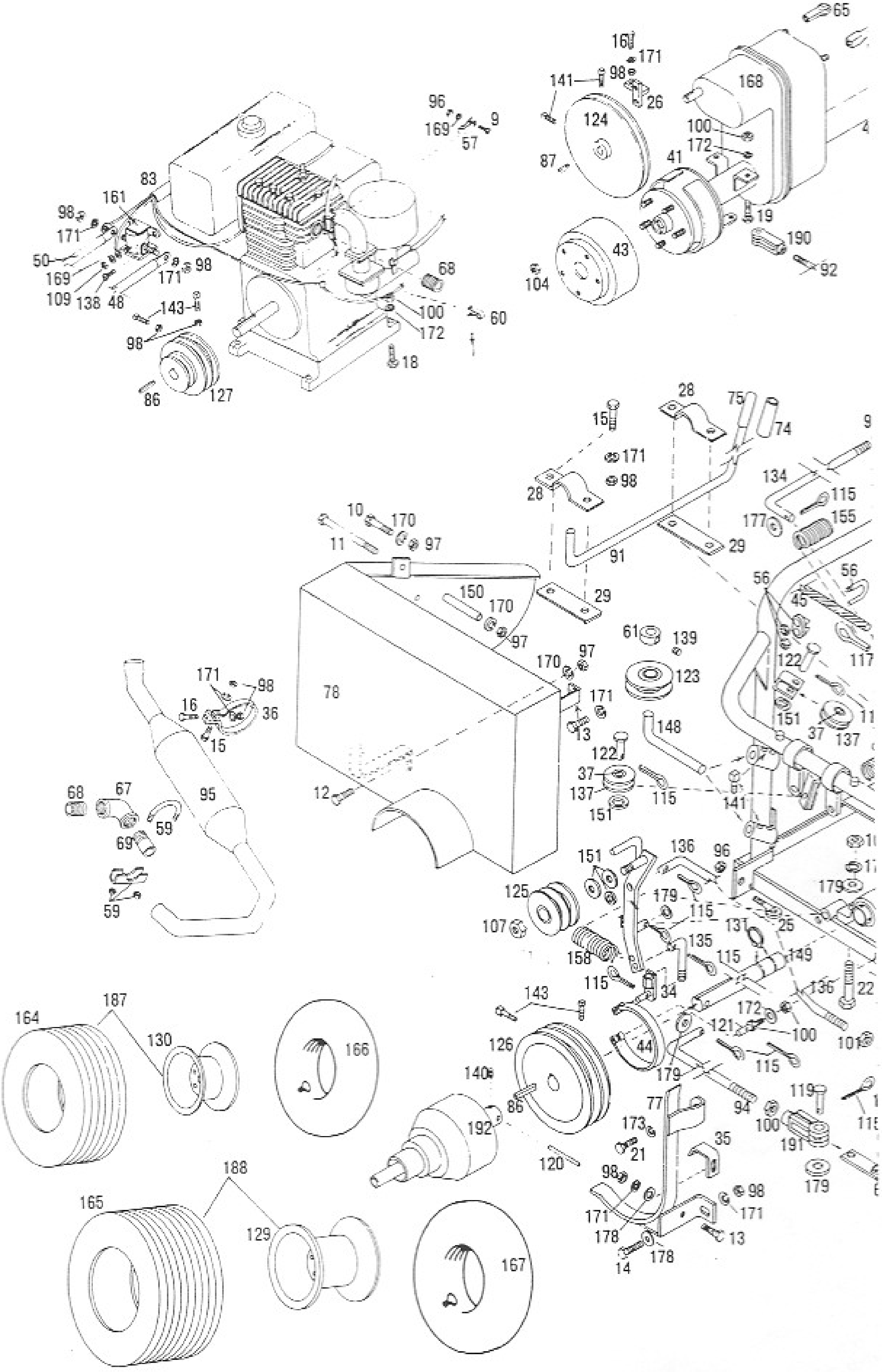

165-B

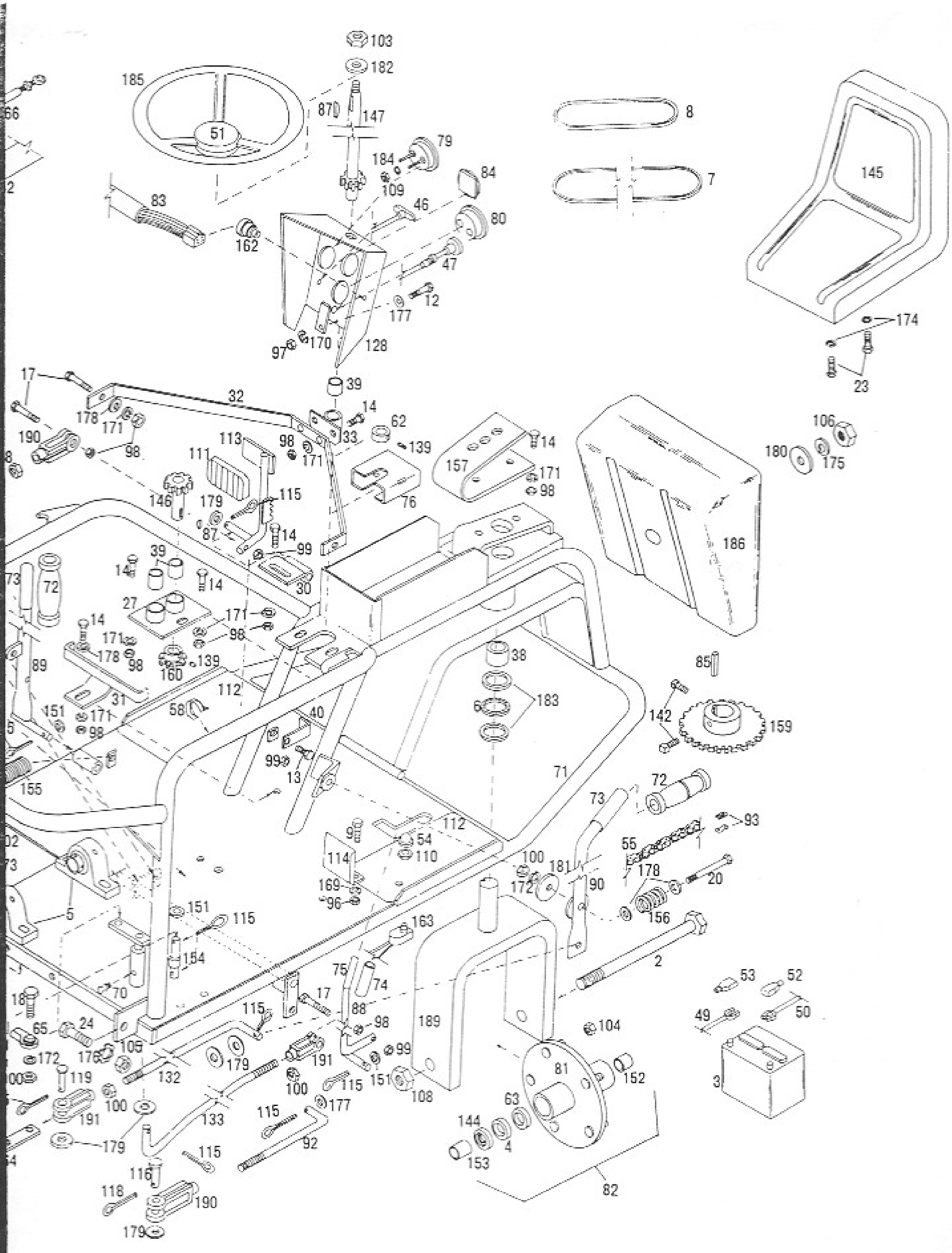

PTO-B CHASSIS PARTS

No.	Part No.	Description
1	102-077	Arm, Idler PTO
2	103-097	Axle, Rear ¾'' x 10½''
3	203-003	Battery, Rider, 3 Wheel
4	204-034	Bearing, Cone ¾ Taper
5	204-077	Bearing, Pillow Block (PTO)
6	204-078	Bearing,-Thrust
7	205-074	Belt, Drive
8	205-137	Belt, Engine PTO
9	208-002	Bolt, 3/16'' x ¾'' RH MS
10	208-031	Bolt, ¼'' x 2'' RH MS
11	208-032	Bolt, ¼'' x 4'' RH MS
12	209-049	Bolt, ¼ x 1
13	209-108	Bolt, 5/16 x ¾ USS CAP
14	209-114	Bolt, Cap x 5/16 x 1''
15	209-120	Bolt, 5/16 x 1¼ NC HH
16	209-126	Bolt, 5/16 x 1½ US CAP
17	209-138	Bolt, 5/16'' x 2'' NC HH
18	209-326	Bolt, ⅜ x 1½ NC HH
19	209-350	Bolt, ⅜ x 2½ NC HH
20	209-391	Bolt, ⅜'' x 3'' NC HH
21	209-414	Bolt, 7/16 x ¾ NC HH
22	209-425	Bolt, 7/16 x 1½ NC CAP
23	209-494	Bolt, ½ x 13 x ¾ HH
24	209-617	Bolt, ⅜ x 1½ NF
25	212-003	Bolt, Eye 3/16 x 2
26	214-106	Bracket, Trans. Support
27	214-144	Bracket, Lower Steer
28	214-148	Bracket, Hi-Lo Lever
29	214-149	Bracket, Hi-Lo Lever
30	214-153	Bracket, Brake
31	214-206	Bracket, Battery
32	214-220	Bracket, Steering Upper
33	214-221	Bracket, Upper Steer
34	214-276	Bracket, Brake Band Rod
35	214-283	Bracket, Belt Guard
36	214-298	Bracket, Muffler Support
37	215-022	Bushing, Cable Roller
38	215-101	Bushing, Wheel Yoke Upper
39	215-103	Bushing, Steer Yoke ¾ x ⅞
40	217-012	Brake, Park Lock 3 WH
41	217-016	Brake, Assy RH (2006-061)
42	217-017	Brake, Assy LH (2006-061)
43	217-018	Brake Drum
44	217-020	Brake, Band PTO's
45	301-030	Cable, Cutter
46	301-034	Cable, Throttle
47	301-035	Cable, Choke Panel
48	301-036	Cable, Solenoid/ Start PTO
49	301-057	Cable, Ass'y Neg
50	301-058	Cable, Ass'y Pos
51	303-015	Cap, Steering
52	303-016	Cap, Battery Red
53	303-017	Cap, Battery Black
54	303-081	Cap, Auto Cutoff Switch
55	305-045	Chain, Rider
56	307-002	Clamp, Cable C/S
57	307-004	Clamp, Throttle Cable
58	307-005	Clamp, 1¼ Throttle
59	307-012	Clamp, 1½ Muffler
60	307-025	Clamp, Cable
61	311-002	Collar, ⅝''
62	311-003	Collar, ¾''
63	312-008	Cone, Steering Hub
64	501-002	Elbow, Tractor
65	502-002	End, Rod
66	502-013	End, Hi-Lo Rod
67	503-009	Muffler, Elbow
68	503-022	Ext., B&S Exhaust
69	503-029	Ext., PTO-B Engine
70	603-004	Fitting, Grease
71	605-032	Frame, Main PTO-B
72	703-016	Grip, Handle Sponge ⅞''
73	703-017	Grip, Plastic Black ⅞''
74	703-020	Grip, Sponge ½''
75	703-021	Grip, Plastic Black ½''
76	704-084	Guard, Steering
77	704-329	Guard, Belt Assy. PTO B&S
78	704-334	Guard, Belt
79	706-002	Gauge, Ammeter
80	706-003	Gauge, Hour Meter
81	807-038	Hub, Rear Wheel
82	808-123	Hub, Rear Steering Assy.
83	811-002	Harness, Wiring (B&S)
84	902-001	Incmtr, Rider Display
85	1102-002	Key, ¼'' x ¼'' x 1''
86	1102-012	Key, ¼'' x ¼'' x 3''
87	1102-013	Key, Woodruff
88	1201-006	Lever, Blade Engaging
89	1201-008	Lever, C. S. Lift
90	1201-036	Lever, Clutch
91	1201-037	Lever, Hi/Lo (PTO)
92	1201-054	Lever, Brake
93	1204-001	Link, Master
94	1205-015	Linkage, Short Clutch
95	1304-005	Muffler, YR 48/42
96	1401-002	Nut, 3/16-10-24 Flexlock
97	1401-010	Nut, ¼ USS
98	1401-020	Nut, 5/16 USS
99	1401-021	Nut, 5/16'' USS Lock
100	1401-030	Nut, ⅜'' USS
101	1401-032	Nut, ⅜'' SAE
102	1401-040	Nut, 7/16
103	1401-050	Nut, ½'' JAM SAE
104	1401-061	Nut, 7/16'' Tapered
105	1401-070	Nut, ⅝'' SAE JAM
106	1401-071	Nut, ⅝'' SAE FULL
107	1401-072	Nut, ⅝'' SAE Flex Lock
108	1401-081	Nut, ⅜ Flex Lock Thin
109	1401-197	Nut, 10-32 Brass
110	1401-222	Nut, Auto Cut-off Switch
111	1601-001	Pad, Brake Pedal
112	1601-004	Pad, Foot
113	1602-011	Pedal, Brake
114	1602-012	Pedal, Automatic Cut-off
115	1604-002	Pin, Cotter 3/32 x 1''
116	1604-013	Pin, 3/16 x 1¼ Rivet
117	1604-038	Pin, Cotter 3/16'' x 1''
118	1604-042	Pin, Cotter ⅛''
119	1604-061	Pin, Rivet ⅜ x 1½
120	1604-066	Pin, Roll 5/16'' x 2¼''
121	1604-103	Pin, Break Band Hydro
122	1604-107	Pin, Cable Roller, ⅜ x 1½
123	1608-009	Pulley, Assy
124	1608-113	Pulley, 10 IN B Groove ¾
125	1608-148	Pulley, Engine Idler
126	1608-336	Pulley, 7 x 1
127	1608-~~[illegible]~~ 374	Pulley, Engine YR (B&S)
128	1613-002	Panel, Instrument
129	1805-026	Rim, Front Wheel Assy
130	1805-027	Rim, Rear Wheel Assy
131	1806-008	Ring, Snap Pillow Block
132	1808-143	Rod, Control F/R PTO
133	1808-144	Rod, Blade Engaging
134	1808-149	Rod, Brake
135	1808-203	Rod, Brake Band Hydro
136	1808-211	Rod, Idler Engaging
137	1809-001	Roller, Cable
138	1901-003	Screw, Sheet Metal ¼ x ¾
139	1901-006	Screw, Set 5/16 x ¼ HH
140	1901-017	Screw, Set ⅜ x ⅜ Dr Sha
141	1901-033	Screw, Set 5/16 x ¾ SH
142	1901-034	Screw, Set ⅜ x ½ NC SH
143	1901-136	Screw, Set 5/16 x 1¼
144	1902-005	Seal, Rider Steering Hub
145	1903-013	Seat, Tractor
146	1904-115	Shaft, Int Steering
147	1904-116	Shaft, Long Steering
148	1904-152	Shaft, Idler Tractor
149	1904-191	Shaft, Pulley PTO
150	1913-029	Spacer, Guard
151	1913-040	Spacer, ⅝ x ⅞
152	1913-074	Spacer, Rider Rear Axle
153	1913-216	Spacer, 1'' OD x ¾'' ID x 1½''
154	1913-232	Spacer, ⅝ OD x .36 ID x ½
155	1916-012	Spring, C/S Lever
156	1916-020	Spring, Frd. Rev. Lever
157	1916-080	Spring, Seat
158	1916-116	Spring, Idler Tension (PTO's)
159	1917-044	Sprket, 36 Steering
160	1917-045	Sprket, Steering, Tractor
161	1923-007	Switch, Solenoid
162	1923-009	Switch, Panel (B&S)
163	1923-023	Switch, Automatic Cut-off
164	2003-~~066~~ 054	Tire, Rear
165	2003-~~067~~ 058	Tire, Front
166	2005-054	Tube, Rear 650 x 8
167	2005-055	Tube, Front 950 x 8
168	2006-061	Trans, Axle W/Brake
169	2301-001	Washer, 3/16 Lock
170	2301-003	Washer, ¼ Lock
171	2301-004	Washer, 5/16 Lock
172	2301-006	Washer, ⅜ Lock
173	2301-007	Washer, 7/16 Lock
174	2301-008	Washer, ½ Lock
175	2301-010	Washer, ⅝ Lock
176	2301-011	Washer, ⅝ Star Lock
177	2301-020	Washer, ¼ Flat
178	2301-021	Washer, 5/16 Flat
179	2301-022	Washer, ⅜ Flat
180	2301-028	Washer, 1⅜ OD x ¾ ID
181	2301-045	Washer, Fibre 1⅜ OD x ¾ ID
182	2301-096	Washer, Concave
183	2301-097	Washer, Thrust
184	2301-284	Washer, Star Lock
185	2303-008	Wheel, Steering
186	2304-009	Weight, Rider
187	2305-018	Wheel, Rear Assy
188	2305-022	Wheel, Front Assy
189	2501-018	Yoke, Steering
190	2501-027	Yoke, 5/16-18th
191	2501-030	Yoke, ⅜''
192	1904-190-001	PTO Shaft, Male Section
	1904-190-002	PTO Shaft, Female Section (Cutting Section)

Key No. 127 Engine
Pulley for standard
replacement Engine
with 1'' C/S use
1608-164

Clutch Gasket set 0701-087

Complete clutch 0310-020

TRANSAXLE PARTS

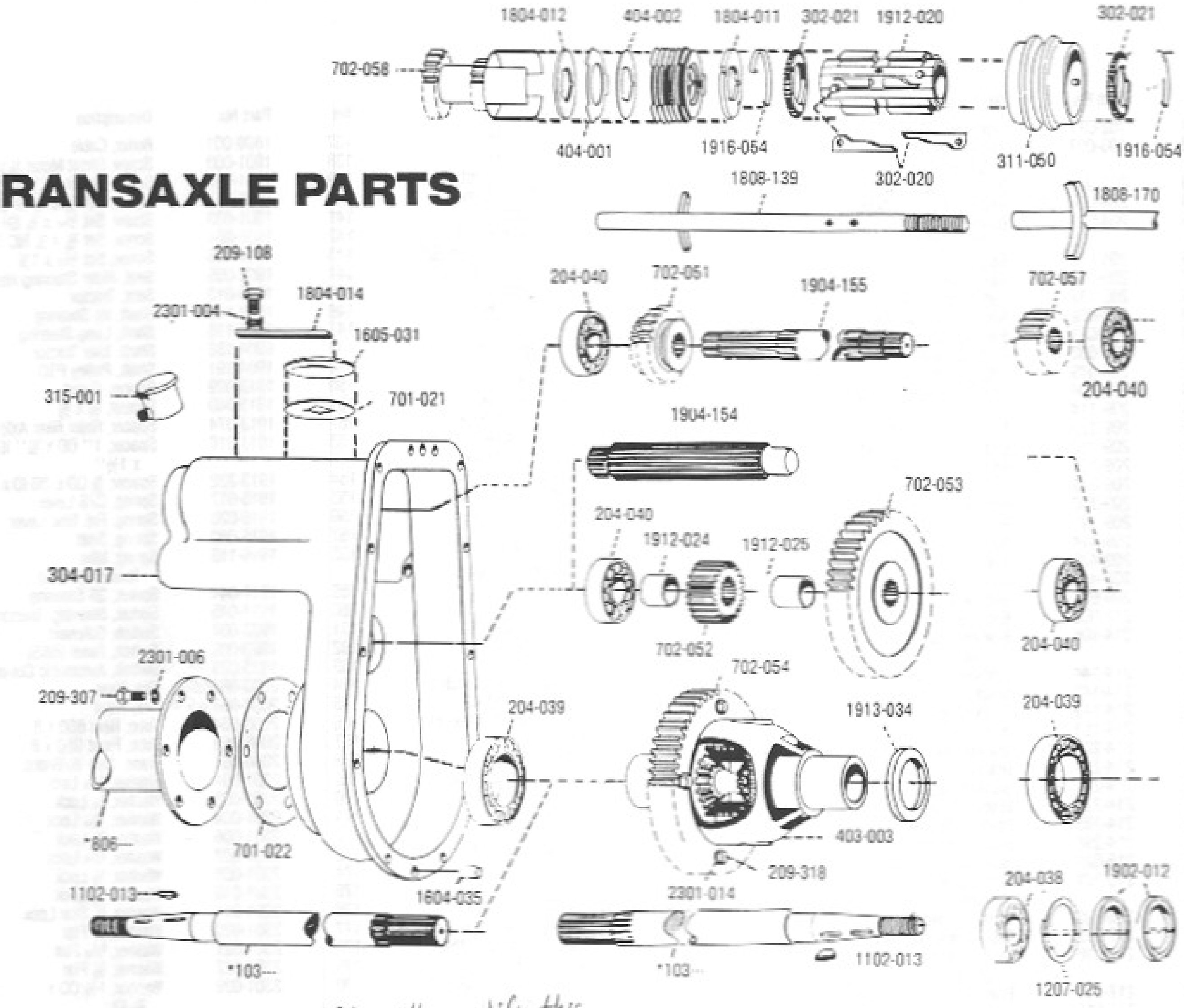
1804-012
404-002
1804-011
302-021
1912-020
302-021
702-058
404-001
1916-054
302-020
311-050
1916-054
1808-139
1808-170
209-108
1804-014
2301-004
1605-031
315-001
701-021
204-040
702-051
1904-155
702-057
204-040
1904-154
702-053
204-040
1912-024
1912-025
702-052
204-040
304-017
2301-006
209-307
702-054
204-039
1913-034
204-039
403-003
*806
701-022
209-318
1102-013
1604-035
2301-014
204-038
1902-012
*103
*103
1102-013
1207-025

On the YR60, either modify this axle or order a new housing also.

Part No.	Description
* 103-~~090~~082	Long axle
* 103-091	Short axle
204-037	Detent ball
204-038	Ball bearing
204-039	Diff. Carrior bearing
204-040	Ball bearing
209-108	5/16-18 x ¾" HH bolt
209-114	5/16-18 x 1" HH bolt
209-120	5/16 x 1¼" HH bolt
209-307	3/8-16 x ¾" HH bolt
209-318	3/8-24 x 1" HH Ht. bolt
212-011	Spring retainer bolt
217-018	Brake drum
217-016	Brake assembly (RH)
217-017	Brake assembly (LH)
302-020	Clutch dog cam
302-021	Clutch adjustment cam
304-016	Deep half case
304-017	Shallow half case, with transaxle brake
311-050	Selector collar
315-001	Oil breather cup
403-003	Complete differential (less gear)
404-001	Outer disc (16 required)
404-002	Inner disc (14 required)
701-021	Inspection plate gasket
701-022	Axle housing gasket
702-050	Reverse gear
702-051	Hi-Low shift gear
702-052	Differential drive gear
702-053	Intermediate drive gear
702-054	Differential gear
702-057	Primary drive gear
702-058	Forward drive gear
* 806-090	Short axle housing
* 806-091	Long axle housing
807-036	Rider drive wheel hub
1101-001	Keeper, 2 Halves
1102-013	Woodruff key
1102-014	Hypro key
1207-025	Ring lock
1401-020	5/16-18 nut

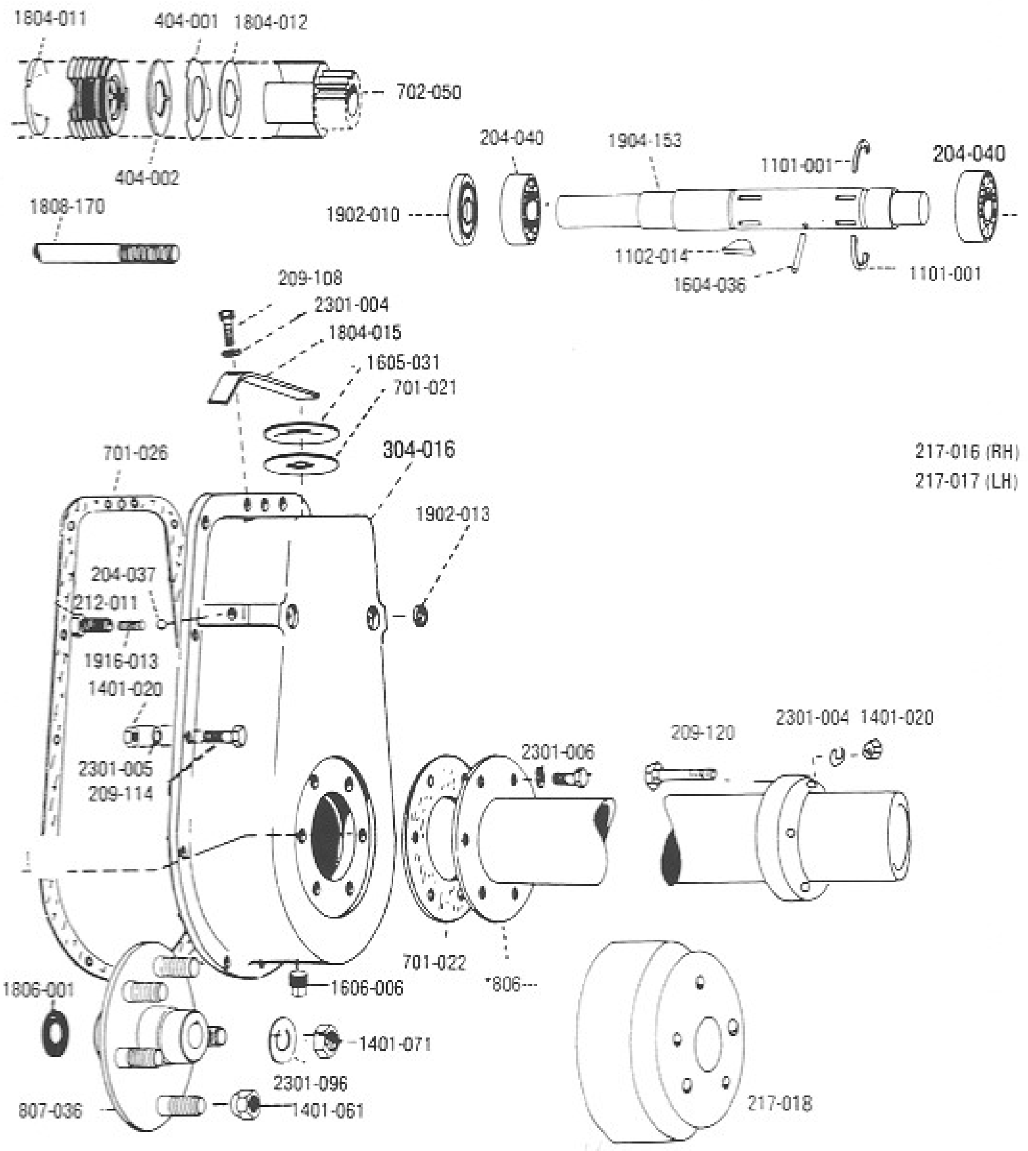
1804-011
404-001
1804-012
702-050
404-002
1808-170
204-040
1904-153
1101-001
204-040
1902-010
1102-014
1604-036
1101-001
209-108
2301-004
1804-015
1605-031
701-021
701-026
304-016
1902-013
204-037
212-011
1916-013
1401-020
2301-005
209-114
2301-006
209-120
2301-004 1401-020
217-016 (RH)
217-017 (LH)
701-022
*806---
1606-006
1806-001
1401-071
2301-096
807-036
1401-061
217-018

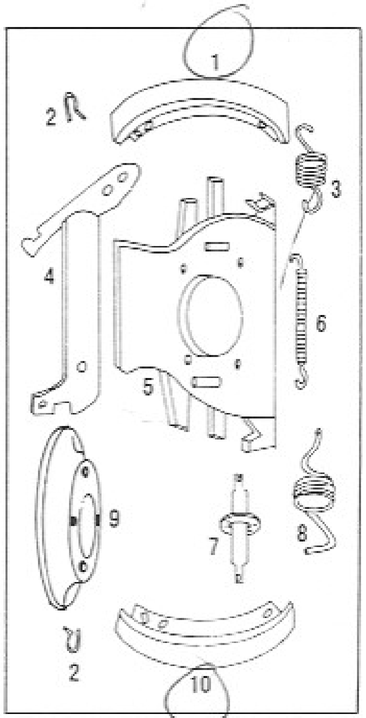
1
2 R
3
4
5
6
7
8
9
2
10

At the time of printing, brake parts were available only as part of a complete kit. They are numbered for easier identification in case individual parts become available.

Brake Shoes -
1908-012
1908-013

1401-020	5/16-18 nut
1401-061	7/16" tapered nut
1401-071	5/8-18 full nut
1604-035	3/8" x 3/4" dowell pin
1604-036	Clutch retainer pin
1605-031	Oil fill inspection plate
1606-006	3/8" standard pipe drain plug
1804-011	Inner disc retainer
1804-012	Outer disc retainer
1804-014	Inspection plate retainer
1804-015	Inspection plate retainer
1806-001	3/4" I.D. x 1" O.D. ring
1808-139	Hi-Low selector rod, used with brake
1808-170	Forward & reverse selector rod, used with brake
1902-012	Axle seal
1902-013	Control rod oil seal
1904-153	Clutch shaft
1904-154	Splined shaft
1904-155	Intermediate drive shaft
1912-020	Clutch sleeve

1912-024	Short clutch sleeve
1912-025	Intermediate sleeve, long
1913-034	Differential spacer
1916-013	Detent spring
1916-054	Clutch adjusting spring
2301-004	5/16" lock washer
2301-005	5/16" ext. star lock washer
2301-006	3/8" lock washer
2301-014	3/8" Int. star lock washer
2301-096	5/8" cupped spring washer

310-020	Complete clutch
2006-061	Transaxle w/brake, PTO Wisconsin & PTO Briggs

*A check of parts list is required for complete part number